komplus

Pipe and Fittings

Technical Catalog

www.komplus.com.tr

PP REPSOL ISPLEN PB110H2E

REPSOL ISPLEN PB110H2E is a very low melt flow propylene heterophasic copolymer with a reinforced formulation for extrusion processes, and a high thermal stabilisation. His crystalline structure gives a high rigidity and very high tensile strength resistance. Its flow characteristics and mechanical properties make it specially adapted for high thickness and good superficial shine extrusion products
It can be easily coloured during the extrusion process using the right pigments, preferably in the form of concentrates with a higher melt flow rate than the base polymer.

Applications

In extrusion process that may require high melt viscosity and particularly high tensile properties, such as:

- Boards and Profiles
- Blow-molding
- Sheet extrusion with high superficial shine.
- Pipes.

Recommended melt temperature range from 205 to 225ºC. Processing conditions should be optimised for each production line.

PROPERTIES	VALUE	UNIT	TEST METHOD
General			
Melt flow rate (230°C/ 5 kg)	1,2	g/10 min	ISO 1133
Density at 23ºC	905	kg/m^3	ISO 1183
Mechanical			
Flexural Modulus	1.300	MPa	ISO 178
Charpy impact strength (23ºC, notched)	45	kJ/m^2	ISO 179
Thermal			
Vicat softening temperature A120 (10 N)	147	ºC	ISO 306
HDT 0.45MPa	81	°C	ISO 75
Others			
Shore Hardness	62	-	ISO 868

REPSOL ISPLEN PB110H2E complies with the European Directives regarding materials intended for contact with foodstuffs. The product mentioned herein is not intended to be used for medical, pharmaceutical or healthcare applications and we do not support their use for such applications. For further information, please contact our Technical Service and Development Laboratory or our Customer Care Service.

This information is offered in good faith and meant only as a guide. The transformer or user will be, in each case, responsible for the processing conditions and the final use of the product. Freedom under patents, copyright and registered designs cannot be assumed.

Technical Service and Development:
Repsol Technology Centre
Ctra. de Extremadura A5, Km 18
28931 Móstoles. Madrid
Tel. +34 91 753 86 00
atd_poliolefinas@repsol.com

Headquarters:
Méndez Álvaro, 44
28045 Madrid
Spain
www.chemicals.repsol.com

Customer Care:
sacrq@repsol.com

CERTIFICATE OF ANALYSIS / QUALITY CERTIFICATE

komplus

PRODUCT CODE : M01000114

PRODUCT DESCRIPTION : TISLAMID 6 GF 30 NC

PRODUCT LOT NUMBER : BL30034903-M2

PRODUCTION DATE : 08.01.2019

PHYSICAL

PROPERTIES	CONDITION	STANDARD	UNITS	VALUE
ASH CONTENT	750 ºC±50 ºC	ISO 3451	%	31,56
DENSITY	+23°C	ISO 1183	g/cm³	1,36
MOLDING SHRINKAGE	PARALLEL	ISO 294-4	%	0,1
HARDNESS	+23°C	ISO 868	ShD	82
MOISTURE CONTENT	-	ISO 15512	%	0,13

MECHANICAL

PROPERTIES	CONDITION	STANDARD	UNITS	VALUE
IZOD IMPACT STRENGTH, NOTCHE	+23°C	ISO 180/1A	Kj/m²	19,16
YIELD STRENGTH	+23°C	ISO 527-2	MPa	153,86
TENSILE STRAIN AT BREAK	+23°C	ISO 527-2	%	4,75
TENSILE MODULUS	+23°C	ISO 527-2	MPa	9.865

THERMAL

PROPERTIES	CONDITION	STANDARD	UNITS	VALUE
MELTING TEMPERATURE	10°C/min	ISO 11357	°C	225

To the best of our knowledge, the information contained in this publication is accurate; however, we do not assume an liability whatsover for the accuracy and completeness of such information.The information contained in this publication should not be construed as a promise or guarantee of specific properties of our products.Any values shown are based on testing of laboratory test specimens and represent data that fall within the standard range of properties for natural material.These values alone do not represent a sufficent basis for any part design. Colorants or other additives may cause significant variations in data values.Properties of molded pans can be influenced by a wide variety of factors including, but not limited to, material selection, additives, part design, processing conditions and environmental exposure.Any determination of the suitability of a particular material and part design for any use contemplated by the users and the manner of such use is the sole responsibility of the users, who must assure themselves that the material as subsequently processed meets the needs of their particular product or use.It is the sole responsibility of the users investigate whether any existing patents are infringed by the use of the materials mentioned in this publication. Call Customer Services for the appropriate Material Safety Data Sheets (MSDS) before attempting to process our products.

komplus

TECHNICAL DATA SHEET

PRODUCT CODE : **M01000114**
PRODUCT DESCRIPTION : **PA6 30% GLASS FIBER REINFORCED, NATURAL**

	PROPERTIES	CONDITION	STANDARD	UNITS	VALUE
PHYSICAL	DENSITY	-	ISO 1183	g/cm^3	**1.34-1.39**
	MOLDING SHRINKAGE	PARALLEL	ISO 294-4	%	**<0.3**
	ASH CONTENT		ISO 3451	%	**28-32**
	MOISTURE CONTENT	-	ISO 15512	%	**<0.2**

	PROPERTIES	CONDITION	STANDARD	UNITS	VALUE
MECHANICAL	YIELD STRENGTH	+23°C	ISO 527-2	MPa	**150-170**
	TENSILE STRESS AT BREAK	+23°C	ISO 527-2	MPa	**-**
	TENSILE STRAIN AT BREAK	+23°C	ISO 527-2	%	**>3**
	TENSILE MODULUS	+23°C	ISO 527-2	MPa	**9000-11000**
	IZOD IMPACT STRENGTH, NOTCHED	+23°C	ISO 180/A	Kj/m^2	**14-20**
	IZOD IMPACT STRENGTH, NOTCHED	-30°C	ISO 180/A	Kj/m^2	**-**
	IZOD IMPACT STRENGTH, UNNOTCHED	+23°C	ISO 180/U	Kj/m^2	**-**
	IZOD IMPACT STRENGTH, UNNOTCHED	-30°C	ISO 180/U	Kj/m^2	**-**

	PROPERTIES	CONDITION	STANDARD	UNITS	VALUE
THERMAL	VICAT SOFTENING TEMPERATURE	50 N	ISO 306	°C	**-**
	HEAT DEFLECTION TEMPERATURE	0,45 MPa	ISO 75	°C	**-**
	HEAT DEFLECTION TEMPERATURE	1,80 MPa	ISO 75	°C	**190-200**
	MELTING TEMPERATURE	10 K/min	ISO 11357	°C	**220-230**

HAMMADDE ÖZELLİKLERİ
RAW MATERIAL PROPERTIES

Turgutlar boru ve ekleme parçaları düşük erime endeksine, yüksek molekül ağırlığa ve yüksek esnekliğe sahip olan PPR-C (Polipropilen Random Kopolimer) hammaddesinden üretilir. Yüksek molekül ağırlığı PPR-C' ye 0°C ' nin altındaki sıcaklıklarda dahi daha yüksek çarpma direnci ve çok iyi sürünme direnci verir. Bu özellikler de basınç ve sıcaklığa yüksek direnç gerektiren alanlar için uygunluk sağlar.

Polipropilen poliolefin gurubuna dahil olan bir termoplastiktir. Yarı kristal malzemedir. Polipropilen, süper aktif katalizörlerin etkisiyle, sıcaklık basınç gibi özel koşullar altında propilenin (C_3H_8) polimerizasyonuyla elde edilen termoplastik polimerdir.

Turgutlar *pipes and fittings are manufactured having low melt flow index, high molecular weight and high flexibility PPR-C (Polypropylene Random Copolymer) raw material. The high molecular weight gives PPR-C higher impact resistance and workability, even to temperatures below 0°C and a very good resistance to creep; all that makes it particulary suitable for applications requiring high resistance to temperature and pressure.*

Polypropylene is a thermoplastic belonging to the polyolefin group. It is a semi-crystalline material. Polypropylene is a thermoplastic polymer obtained by polymerisation of propylene (C_3H_8) in specific conditions of temperature / pressure and in the presence of a superactive catalysts.

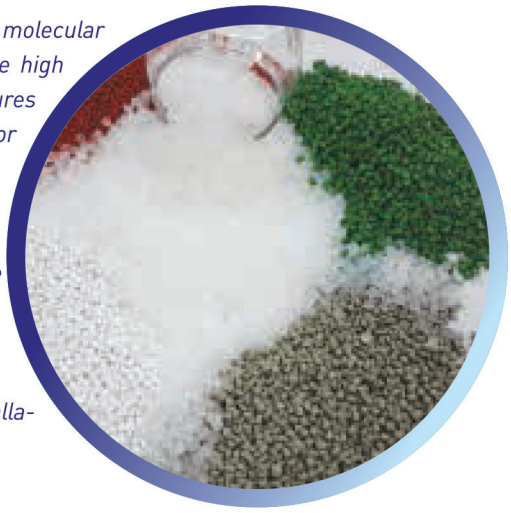

Boru tesisatları için yaygın olarak kullanılan üç farklı çesit vardır:

There are three different types which are conventionally supplied for piping installations:

Polipropilen homopolimer / *Polypropylene homopolymer* PP-H (type 1)
Polipropilen blok kopolimer / *Polypropylene block copolymer* PP-B (type 2)
Polipropilen random kopolimer / *Polypropylene random copolymer* PP-R (type 3)

PPR-C hammaddesi temiz su iletim hatları, ısıtma sistemleri, kimya endüstrisi gibi birçok uygulama alanında basınçlı boru üretimi için tavsiye edilir.

PPR-C raw material is recommended for pressurized pipe manufacturing for many applications such as clean water transport, heating system, chemical industry.

Tablo 1 / *Table 1*

ÖZELLİKLER / CHARACTERISCTICS	DEĞERLER VALUES	BİRİMLER UNITS	KONTROL METOTLARI METHOD FOR CONTROL
Yoğunluk / *Density*	905	kg/cm³	ISO 1183
Erime Akış İndeksi / *Melt Flow Rate 230°C / 2,16 kg*	0,3	g/10 dk	ISO 1183
Eğilme Mödülü / *Flexural Modulus 2 (mm/dk)*	800	MPa	ISO 178
Doğrusal Gerilme / *Linear Stress (50 mm/dk)*	25	MPa	ISO 527-2
Doğrusal Uzama / *Linear Expansion (50 mm/dk)*	13,5	%	ISO 527-2
Gerilmedeki elastisite Modülü / *Modulus of Elasticity in Tension (1 mm/dk)*	900	MPa	ISO 527
Charpy Darbe Mukavemeti / Charpy Impact Strength (+23°C)	20	kJ / m²	ISO 179
(+0°C)	3,5	kJ / m²	ISO 179
Çentikli / *Notched* (-20°C)	2	kJ / m²	ISO 179
Çentiksiz / *Unnotched* (-20°C)	40	kJ / m²	ISO 179
İç Hidrostatik Basınca Karşı Direnci / *Resistance to Hydrostatic pressure*			
16,0 MPa; 20°C; > 1 saat / *hour*	>10	saat / *hour*	ISO 1167
3,5 MPa; 95°C; > 1000 saat / *hour*	>1200	saat / *hour*	ISO 1167
1,9 MPa; 110°C; > 8760 saat / *hour*	>8760	saat / *hour*	ISO 1167
0°C'den 70°C'ye kadar ki Termal Uzama Katsayısı *Mean Linear Thermal Coefficient of Expansion from 0°C to 70°C*	1,5	$*10^{-4}\ K^{-1}$	DIN 53752
Termal İletkenlik / *Thermal Conductivity*	0,24	$WK^{-1}m^{-1}$	DIN 52612
Yüzey Direnci / *Surface Resistance*	$> 10^{12}$	Ω	DIN 53482

GERİLME EĞRİLERİ / *REGRESSION CURVES*

Gerilme eğrisi basınç ve çalışma sıcaklığına bağlı olarak, boru hattının davranışını gösterir. Çevresel gerilme eğrisi, boru et kalınlığına etki eden çevresel gerilmenin bir fonksiyonu olarak, boru sisteminin ortalama ömrünü belirler. Bu eğriler çevresel gerilmeyi hesaplamak için kullanılabilir.

Regression curves show the behavior of pipeline depending on pressure and operating temperature. It establishes the average life expectancy of a pipe line as function of hoop stress acting on the pipe walls. These curves can be used to calculate the hoop stress.

Çevresel gerilme, aşağıdaki formüle uygun olarak basınç ile orantılıdır :

Hoop stress is in proportion with the pressure according to the following formula :

$$\sigma = P \times \frac{D - S}{20 \times S}$$

σ,P,D ve S sembolleri aşağıda tanımlanmıştır :

where **σ**, *P, D, and S have been defined :*

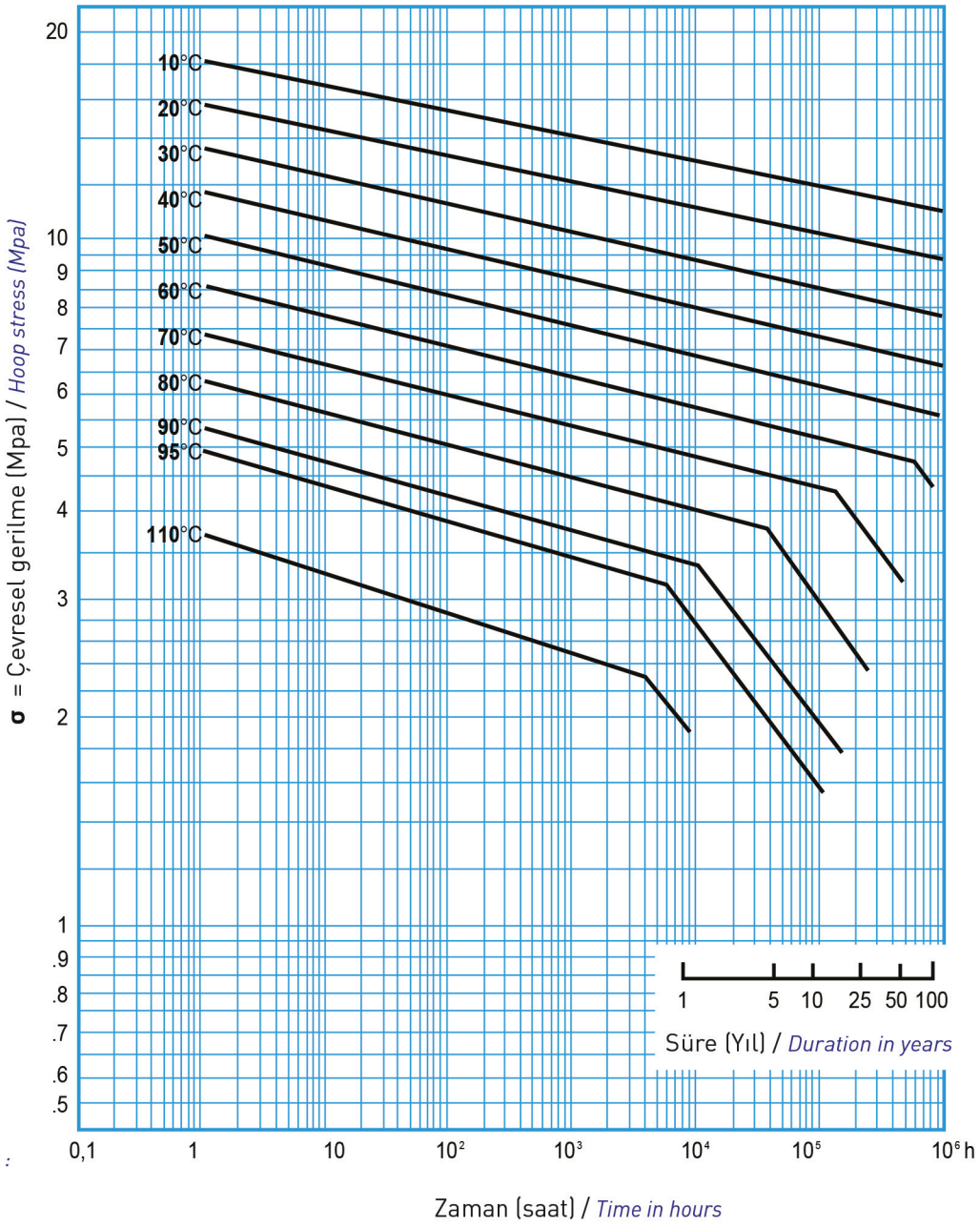

σ= Çevresel gerilme / *Hoop stress (Mpa)*
P = İç basınç / *Internal pressure (bar)*
D = Borunun dış çapı / *Outer diameter of Pipe (mm)*
S = Boru et kalınlığı / *Wall thickness of Pipe (mm)*

Örnek: Example:

Borunun kullanım süresi /*Usage time of pipe :* *20 years*
İşletme sıcaklığı / *Operation temperature* : *80 °C*
Boru dış çapı / *Outer diameter of pipe (D)* : *20 mm*
Boru et kalınlığı / *Wall thickness of pipe (S)* : *3,4 mm*
Çevresel gerilme / *Hoop stress (σ)* : *2,5 Mpa*
İşletme basıncı / *Operation pressure (P)* : *?*

$$P = \frac{20 \times S \times \sigma}{D - S} = \frac{20 \times 3{,}4 \times 2{,}5}{20 - 3{,}4} = 10{,}2\ bar$$

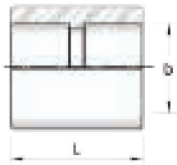

MANŞON / *SOCKET*

Kod Code	Ebat Size	Paket (adet) Package (pcs)	Kutu (adet) Box (pcs)	D (mm)	L (mm)
1130-000020	20	100	600	20	33
1130-000025	25	100	400	25	37
1130-000032	32	100	200	32	41
1130-000040	40	50	100	40	49
1130-000050	50	10	50	50	51
1130-000063	63	5	30	63	63
2130-000075	75	6	24	75	72
2130-000090	90	2	10	90	82
2130-000110	110	2	8	110	86

REDÜKSİYON MANŞON / *REDUCTION SOCKET*

Kod Code	Ebat Size	Paket (adet) Package (pcs)	Kutu (adet) Box (pcs)	D (mm)	d (mm)
2129-025020	25x20	100	500	25	20
2129-032020	32x20	100	300	32	20
2129-032025	32x25	100	300	32	25

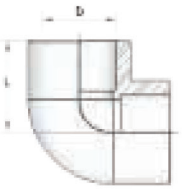

DİRSEK 90° / *ELBOW 90°*

Kod Code	Ebat Size	Paket (adet) Package (pcs)	Kutu (adet) Box (pcs)	D (mm)	L (mm)
1132-000020	20	100	400	20	25
1132-000025	25	50	250	25	29
1132-000032	32	25	100	32	36
1132-000040	40	20	60	40	43
1132-000050	50	10	40	50	47
1132-000063	63	2	20	63	50
2132-000075	75	2	12	75	65
2132-000090	90	2	6	90	85
2132-000110	110	1	3	110	93

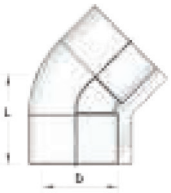

DİRSEK 45° / *ELBOW 45°*

Kod Code	Ebat Size	Paket (adet) Package (pcs)	Kutu (adet) Box (pcs)	D (mm)	L (mm)
1133-000020	20	100	500	20	19
1133-000025	25	100	300	25	21
1133-000032	32	50	150	32	23
2133-000040	40	20	60	40	29
2133-000050	50	10	50	50	36
2133-000063	63	7	28	63	43
2133-000075	75	2	12	75	67
2133-000090	90	2	8	90	87
2133-000110	110	1	3	110	103

İNEGAL TE / *UNEQUAL TEE*

Kod Code	Ebat Size	Paket (adet) Package (pcs)	Kutu (adet) Box (pcs)	D (mm)	d_1(mm)	d_2(mm)	L (mm)
1136-252020	25x20x20	50	150	25	20	20	31
1136-252025	25x20x25	50	150	32	20	25	31
1136-322032	32x20x32	25	75	32	20	32	35
1136-322532	32x25x32	25	75	40	25	32	35
2136-402040	40x20x40	15	60	40	20	40	33
2136-402540	40x25x40	15	60	40	25	40	33
2136-403240	40x32x40	15	60	50	32	40	33
2136-502050	50x20x50	5	5	50	20	50	45
2136-502550	50x25x50	5	5	50	20	50	45
2136-503250	50x32x50	5	5	50	32	50	45
2136-504050	50x40x50	5	30	50	40	50	45
2136-632063	63x20x63	5	20	63	20	63	53
2136-632563	63x25x63	5	20	63	25	63	53
2136-633263	63x32x63	5	20	63	32	63	53
2136-634063	63x40x63	2	14	63	40	63	53
2136-635063	63x50x63	6	18	63	50	63	53
2136-754075	75x40x75	1	10	75	40	75	69
2136-755075	75x50x75	1	10	75	50	75	69
2136-756375	75x63x75	1	10	75	63	75	70
2136-905090	90x50x90	1	6	90	50	90	79
2136-906390	90x63x90	1	6	90	63	90	79
2136-907590	90x75x90	1	6	90	75	90	80
2136-116311	110x63x110	1	3	110	63	110	93
2136-117511	110x75x110	1	3	110	75	110	94
2136-119011	110x90x110	1	3	110	90	110	94

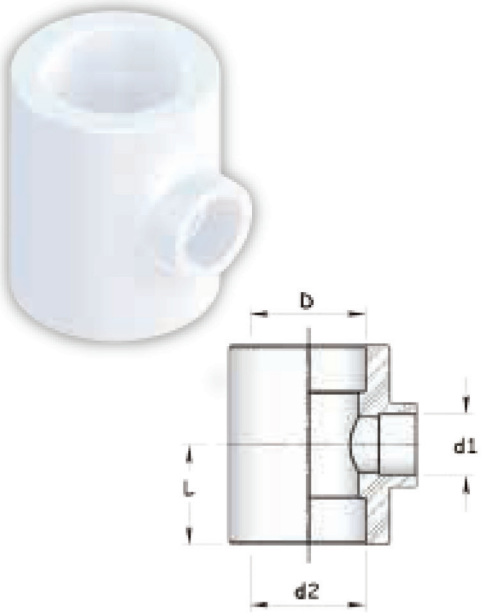

V TİPİ KAVİS / *PIPE BRIDGE (V TYPE)*

Kod Code	Ebat Size	Paket (adet) Package (pcs)	Kutu (adet) Box (pcs)	D (mm)	L (mm)	h (mm)
2137-000020	20	25	100	20	157	46
2137-000025	25	15	75	25	193	56
2137-000032	32	10	40	32	215	71

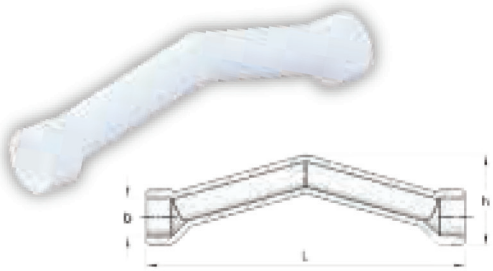

C TİPİ KAVİS / *PIPE BRIDGE (C TYPE)*

Kod Code	Ebat Size	Paket (adet) Package (pcs)	Kutu (adet) Box (pcs)	D (mm)	L (mm)	h (mm)
2134-000020	20	50	150	20	88	29
1134-000025	25	25	125	25	95	35

BORU TİPİ KAVİS / *BRIDGE JUMP*

Kod Code	Ebat Size	Paket (adet) Package (pcs)	Kutu (adet) Box (pcs)	D (mm)	L (mm)
2137-200020	20	25	125	20	240
2137-250025	25	20	100	25	355
2137-320032	32	10	40	32	295

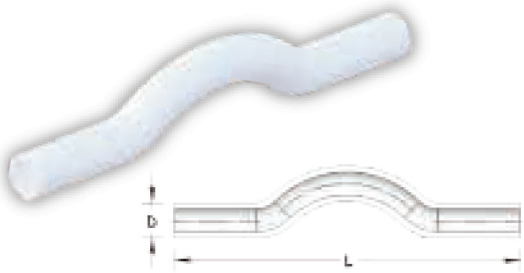

İÇ DİŞLİ RAKOR / *FEMALE UNION*

Kod Code	Ebat Size	Paket (adet) Package (pcs)	Kutu (adet) Box (pcs)	D (mm)	R	L (mm)
1149-020012	20x1/2"	50	300	20	1/2"	38
1149-020034	20x3/4"	50	250	20	3/4"	41
1149-025012	25x1/2"	50	300	25	1/2"	39
1149-025034	25x3/4"	50	200	25	3/4"	43
2149-032012	32x1/2"	25	125	32	1/2"	40
1149-032034	32x3/4"	25	150	32	3/4"	44
1149-032100	32x/1"	35	140	32	1"	44

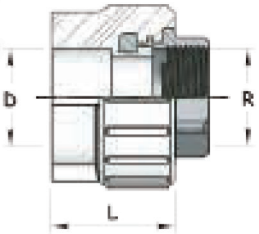

ALTI KÖŞE İÇ DİŞLİ RAKOR / *FEMALE UNION SIX CORNER*

Kod Code	Ebat Size	Paket (adet) Package (pcs)	Kutu (adet) Box (pcs)	D (mm)	R	L (mm)
2151-040114	40x1 1/4"	10	60	40	1 1/4"	50
2151-050112	50x1 1/2"	6	30	50	1 1/2"	48
2151-063200	63x2"	4	24	63	2"	54
2151-075212	75x2 1/2"	2	12	75	2 1/2"	64
2151-090300	90x3"	2	6	90	3"	86
2151-110400	110x4"	1	6	110	4"	90

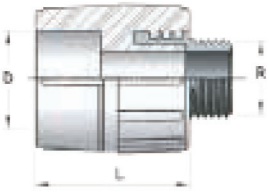

DIŞ DİŞLİ RAKOR / *MALE UNION*

Kod Code	Ebat Size	Paket (adet) Package (pcs)	Kutu (adet) Box (pcs)	D (mm)	R	L (mm)
1150-020012	20x1/2"	50	250	20	1/2"	38
1150-020034	20x3/4"	50	200	20	3/4"	41
1150-025012	25x1/2"	50	250	25	1/2"	39
1150-025034	25x3/4"	50	150	25	3/4"	43
2150-032012	32x1/2"	25	125	32	1/2"	40
1150-032034	32x3/4"	25	125	32	3/4"	44
1150-032100	32x/1"	25	125	32	1"	44

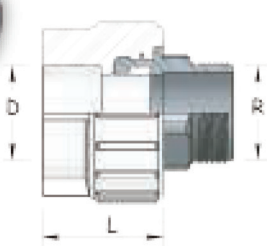

ALTI KÖŞE DIŞ DİŞLİ RAKOR / *MALE UNION SIX CORNER*

Kod Code	Ebat Size	Paket (adet) Package (pcs)	Kutu (adet) Box (pcs)	D (mm)	R	L (mm)
2152-040114	40x1 1/4"	10	50	40	1 1/4"	49
2152-050112	50x1 1/2"	6	30	50	1 1/2"	48
2152-063200	63x2"	4	24	63	2"	54
2152-075212	75x2 1/2"	2	10	75	2 1/2"	64
2152-090300	90x3"	2	6	90	3"	86
2152-110400	110x4"	1	6	110	4"	90

İÇ DİŞLİ TE / *FEMALE TEE*

Kod Code	Ebat Size	Paket (adet) Package (pcs)	Kutu (adet) Box (pcs)	D (mm)	R	L (mm)
1147-020012	20x1/2"	50	200	20	1/2"	26
2147-020034	20x3/4"	25	125	20	3/4"	26
1147-025012	25x1/2"	25	150	25	1/2"	27
1147-025034	25x3/4"	25	125	25	3/4"	33
2147-032012	32x1/2"	10	60	32	1/2"	39
2147-032034	32x3/4"	10	60	32	3/4"	38
1147-032100	32x1"	10	60	32	1"	36

DIŞ DİŞLİ TE / *MALE TEE*

Kod Code	Ebat Size	Paket (adet) Package (pcs)	Kutu (adet) Box (pcs)	D (mm)	R	L (mm)
1148-020012	20x1/2"	30	180	20	1/2"	26
2148-020034	20x3/4"	25	100	20	3/4"	26
1148-025012	25x1/2"	25	125	25	1/2"	27
1148-025034	25x3/4"	20	100	25	3/4"	33
2148-032012	32x1/2"	10	50	32	1/2"	39
2148-032034	32x3/4"	10	50	32	3/4"	38
1148-032100	32x1"	10	50	32	1"	36

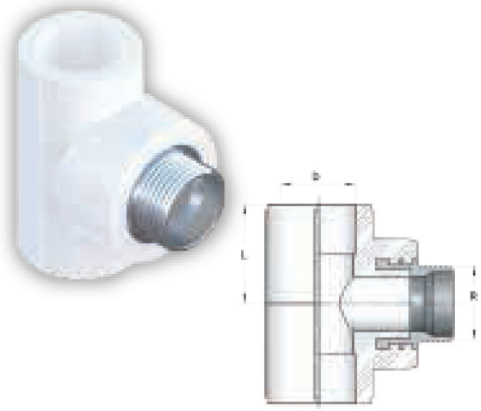

İÇ DİŞLİ DİRSEK / *FEMALE ELBOW*

Kod Code	Ebat Size	Paket (adet) Package (pcs)	Kutu (adet) Box (pcs)	D (mm)	R	L (mm)
1145-020012	20x1/2"	50	250	20	1/2"	30
2145-020034	20x3/4"	25	175	20	3/4"	36
1145-025012	25x1/2"	50	200	25	1/2"	32
1145-025034	25x3/4"	25	150	25	3/4"	35
2145-032012	32x1/2"	10	100	32	1/2"	42
2145-032034	32x3/4"	10	100	32	3/4"	42
1145-032100	32x/1"	10	100	32	1"	42

DIŞ DİŞLİ DİRSEK / *MALE ELBOW*

Kod Code	Ebat Size	Paket (adet) Package (pcs)	Kutu (adet) Box (pcs)	D (mm)	R	L (mm)
1146-020012	20x1/2"	50	200	20	1/2"	30
2146-020034	20x3/4"	25	150	20	3/4"	35
1146-025012	25x1/2"	25	175	25	1/2"	32
1146-025034	25x3/4"	25	125	25	3/4"	35
2146-032012	32x1/2"	10	80	32	1/2"	42
2146-032034	32x3/4"	10	80	32	3/4"	42
1146-032100	32x/1"	10	80	32	1"	42

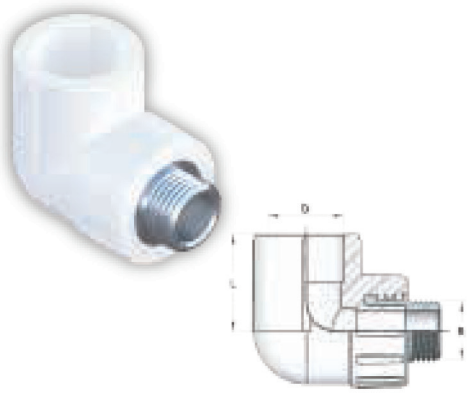

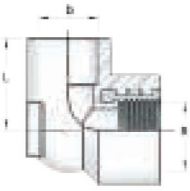

BATARYA BAĞLANTISI (İÇ DİŞLİ)
SINGLE BATERY CONNECTION (FEMALE)

Kod Code	Ebat Size	Paket (adet) Package (pcs)	Kutu (adet) Box (pcs)	D (mm)	R	L (mm)
1158-020012	20x1/2"	50	200	20	1/2"	31
2158-025012	25x1/2"	25	125	25	1/2"	33
2158-025034	25x3/4"	25	125	25	3/4"	34

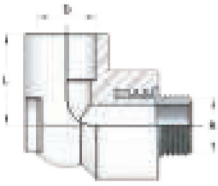

BATARYA BAĞLANTISI (DIŞ DİŞLİ)
SINGLE BATERY CONNECTION (MALE)

Kod Code	Ebat Size	Paket (adet) Package (pcs)	Kutu (adet) Box (pcs)	D (mm)	R	L (mm)
2157-020012	20x1/2"	25	150	20	1/2"	25
2157-025012	25x1/2"	25	100	25	1/2"	27
2157-025034	25x3/4"	25	100	25	3/4"	34

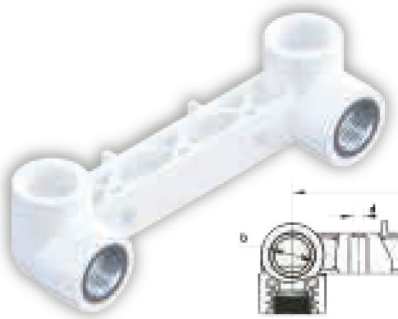

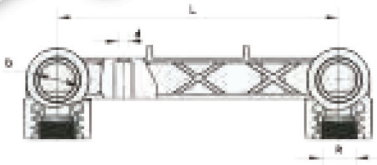

ÇİFTLİ BATARYA BAĞLANTISI
DOUBLE BATERY CONNECTION

Kod Code	Ebat Size	Paket (adet) Package (pcs)	Kutu (adet) Box (pcs)	D (mm)	R	L (mm)
1159-020012	20x1/2"	5	40	20	1/2"	150
1159-025012	25x1/2"	5	40	25	1/2"	150

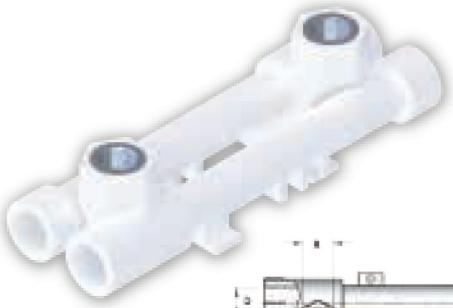

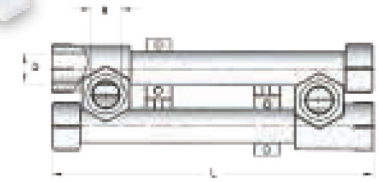

AYARLI ÇİFTLİ BATARYA BAĞLANTISI
ADJUSTABLE DOUBLE BATERY CONNECTION

Kod Code	Ebat Size	Paket (adet) Package (pcs)	Kutu (adet) Box (pcs)	D (mm)	R	L (mm)
2160-020012	20x1/2"	3	24	20	1/2"	255
2160-025012	25x1/2"	3	24	25	1/2"	255

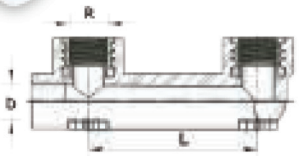

ÇİFTLİ KLOZET BAĞLANTISI / *DOUBLE BATERY LUSTRATION*

Kod Code	Ebat Size	Paket (adet) Package (pcs)	Kutu (adet) Box (pcs)	D (mm)	R	L (mm)
2162-020012	20x1/2"	5	40	20	1/2"	90
2162-025012	25x1/2"	5	40	25	1/2"	90

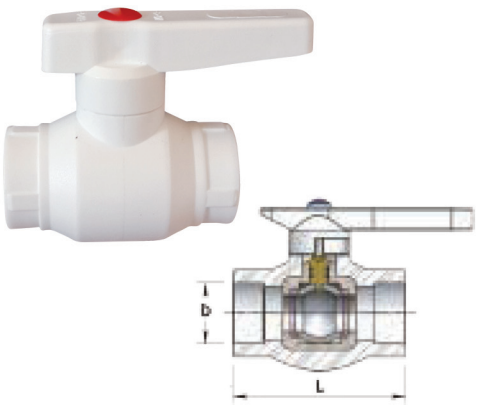

PPR-C KÜRESEL VANA / *PPR-C BALL VALVE*

Kod Code	Ebat Size	Paket (adet) Package (pcs)	Kutu (adet) Box (pcs)	D (mm)	L (mm)
2171-000020	20	20	80	20	74
2171-000025	25	10	50	25	83
2171-000032	32	5	40	32	99
2171-000040	40	2	20	40	111
2171-000050	50	1	15	50	118
2171-000063	63	1	10	63	144
2171-000075	75	1	8	75	162

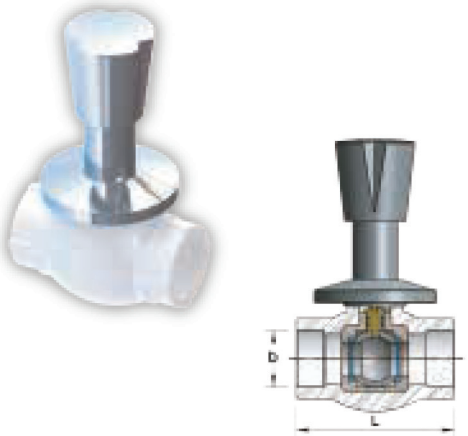

PPR-C KROM KÜRESEL VANA / *PPR-C CHROME BALL VALVE*

Kod Code	Ebat Size	Paket (adet) Package (pcs)	Kutu (adet) Box (pcs)	D (mm)	L (mm)
2169-000020	20	20	80	20	74
2169-000025	25	10	50	25	83
2169-000032	32	5	40	32	99

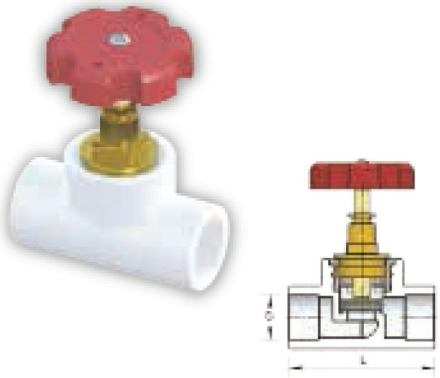

PPR-C KELEBEK VANA / *PPR-C VALVE*

Kod Code	Ebat Size	Paket (adet) Package (pcs)	Kutu (adet) Box (pcs)	D (mm)	L (mm)
1170-000020	20	20	60	20	69
1170-000025	25	10	50	25	78
1170-000032	32	10	30	32	88

PPR-C KROM VANA / *PPR-C CHROME VALVE*

Kod Code	Ebat Size	Paket (adet) Package (pcs)	Kutu (adet) Box (pcs)	D (mm)	L (mm)
1172-000020	20	1	20	20	69
1172-000025	25	1	20	25	78
1172-000032	32	1	20	32	88

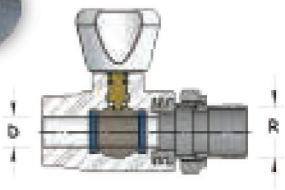

RADYATÖR VANASI (DÜZ) / *RADIATOR VALVE (STRAIGHT)*

Kod Code	Ebat Size	Paket (adet) Package (pcs)	Kutu (adet) Box (pcs)	D (mm)	R
2178-020012	20 x 1/2"	10	100	20	1/2"
2178-025034	25 x 3/4"	10	80	25	3/4"

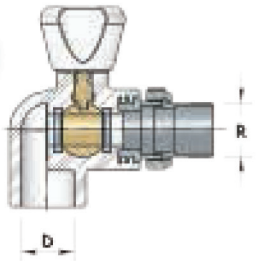

RADYATÖR VANASI (KÖŞELİ) / *RADIATOR VALVE (CORNER)*

Kod Code	Ebat Size	Paket (adet) Package (pcs)	Kutu (adet) Box (pcs)	D (mm)	R
2179-020012	20 x 1/2"	10	100	20	1/2"
2179-025034	25 x 3/4"	10	100	25	3/4"

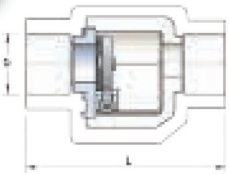

ÇEKVALF / *CHECK VALVE*

Kod Code	Ebat Size	Paket (adet) Package (pcs)	Kutu (adet) Box (pcs)	D (mm)	L (mm)
2177-000020	20	10	100	20	78,4
2177-000025	25	10	60	25	83,4

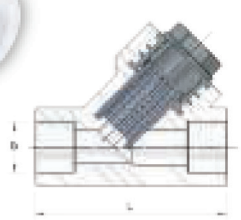

Y - FİLTRE DİŞİ / *Y - FILTER FEMALE*

Kod Code	Ebat Size	Paket (adet) Package (pcs)	Kutu (adet) Box (pcs)	D (mm)	L (mm)
2177-000020	20	10	100	20	78,4
2177-000025	25	10	60	25	83,4

FİLTRE ERKEK / *FILTER MALE*

Kod Code	Ebat Size	Paket (adet) Package (pcs)	Kutu (adet) Box (pcs)	D (mm)	R	L (mm)
2176-000012	20x1/2"	20	100	20	1/2"	71
2176-000025	25x3/4"	20	80	25	3/4"	80
2176-000032	32x1"	10	50	32	1"	80

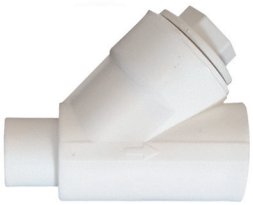

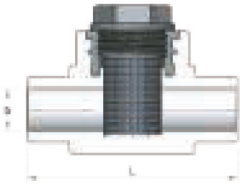

HAREKETLİ RAKOR / *NIPPLE WITH LOOSE NUT*

Kod Code	Ebat Size	Paket (adet) Package (pcs)	Kutu (adet) Box (pcs)	D (mm)	R	L (mm)
2163-020012	20x1/2"	50	250	20	1/2"	32
2163-025034	25x3/4"	50	200	25	3/4"	36

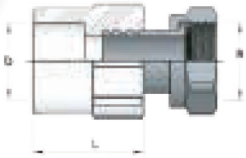

HAREKETLİ DİRSEK / *ELBOW WITH LOOSE NUT*

Kod Code	Ebat Size	Paket (adet) Package (pcs)	Kutu (adet) Box (pcs)	D (mm)	R	L (mm)
2164-020012	20x1/2"	25	150	20	1/2"	29
2164-025034	25x3/4"	25	100	25	3/4"	33

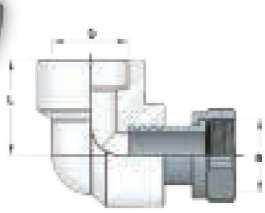

KOMBİ BAĞLANTI SETİ / *COMBI BOILER FITTING SET*

Kod Code	Paket (adet) Package (pcs)	Kutu (adet) Box (pcs)
2198-000001	1	50

KOMBİ BAĞLANTI SETİ İÇERİĞİ / *CONTENTS OF COMBI BOILER FITTING SET*

Kod Code	Ürün Product	Ebat Size	Paket (adet) Package (pcs)
2176-000020	FİLTRE / *FILTER* 20 mm	20x1/2"	1
2176-000025	FİLTRE / *FILTER* 25 mm	25x3/4"	1
2171-000020	PPR-C KÜRESEL VANA 20 mm *PPR-C BALL VALVE 20 mm*	20	1
2171-000025	PPR-C KÜRESEL VANA 25 mm *PPR-C BALL VALVE 25 mm*	25	1
2163-020012	HAREKETLİ RAKOR 20 mm *NIPPLE WITH LOOSE NUTH 20 mm*	20x1/2"	2
2163-025034	HAREKETLİ RAKOR 25 mm *NIPPLE WITH LOOSE NUTH 25 mm*	25x3/4"	2

BORU EK PARÇALARININ KAYIP KATSAYILARI
LOSS COEFFICIENTS OF PIPE FITTINGS

EKLEME PARÇALARI *FITTINGS*		GRAFİK SEMBOLÜ *GRAPHIC SYMBOL*	AÇIKLAMA *REMARK*	KAYIP KATSAYISI *COEFFICIENT OF LOSS*
Te *Equal Tee*			Ayrılan akış / *Flow seperation*	1.8
			Zıt yönde birleşen akış *Counter current flow conjunction*	4.2
			Birleşen akış / *Flow conjunction*	1.3
			Zıt yönde ayrılan akış *Counter current flow seperation*	2.2
İnegal Te *Unequal Tee*			Ayrılan akış / *Flow seperation*	3.6
			Zıt yönde birleşen akış *Counter current flow conjunction*	9.0
			Birleşen akış / *Flow conjunction*	2.6
			Zıt yönde ayrılan akış *Counter current flow seperation*	5.0
90° Dirsek / *90° Elbow*				2.0
45° Dirsek / *45° Elbow*				0.6
İstavroz Te *Cross Tee*			Ayrılan akış / *Flow seperation*	2.1
			Birleşen akış / *Flow conjunction*	3.7
Manşon / *Socket*				0.25
Redüksiyon *Reduction*			1 çap düşüşü / *Reduction by 1 size*	0.4
			2 Çap / *by 2 sizes*	0.5
			3 Çap / *by 3 sizes*	0.6
			4 Çap / *by 4 sizes*	0.7
			5 Çap / *by 5 sizes*	0.8
			6 Çap / *by 6 sizes*	0.9
İç Dişli Te / *Female Tee*				1.4-1.8
Dış Dişli Te / *Male Tee*				1.8
İç Dişli Dirsek *Female Elbow*				1.4
Dış Dişli Dirsek *Male Elbow*				1.6
İç Dişli Rakor *Female Union*				0.5
Dış Dişli Rakor *Male Union*				0.85
Hareketli Rakor *Nipple With Loose Nut*				8.3
Boru Tipi Kavis *Bridge Jump*				0.8
PPR-C Vana *PPR-C Valve*			Ø20	9.5
			Ø25	8.5
			Ø32	7.6
			Ø40	5.7

komplus

Substances	Concentration %	Temperature (°C) 20	60	100
Methyl choloride	100	+	+	+
Me thy! -ethy -ketone	100	+	+	+
Milch	-	+	+	+
Muriatic acid	10	+	+	+
Mustard	-	+	+	+
Naphtalene decahydro	100	+	+	+
Naphtene	100	+	+	+
Naphtalene trachloride	100	+	+	+
Nitric acid	10	+	+	+
Nickel salt	sol.sat.	+	+	+
Nitrobenzene				
Octane	-	+	+	+
Oil	100			
Oii ether	100	+	+	+
Oil of tupenthine	100	+	+	+
Oleic salt	100	+	+	+
Oleum	t	+	+	+
Orange juice	<0.5 ppm	+	+	+
Ozone	-	+	+	+
Oil ;	-	+	+	+
Almond oil	-	+	+	+
Animal oil	-	+	+	+
Camphor oil	-	+	+	+
Coconut oil	-	+	+	+
Cod oil	-	+	+	+
Cloves oil	-	+	+	+
Corn oil	-	+	+	+
Linseed oil	-	+	+	+
Motor oil	-			
Olive oil	-	+	+	+
Oxalic oil	-	+	+	+
Paraffin oil	-	+	+	+
Peppermint oil	-	+	+	+
Rasin oil	-	+	+	+
Silicone oil	-	+	+	+
Paraffin	100	+	+	+
Petroleum	100	+	+	+
Pepper	-	+	+	+
Perborax	sol.sat. (1.4)			
Perfume	-	+	+	+
Phenol	sol.sat.			
Phosphurus acid	sol.sat.	+	+	+
Phosphurus oxichloride	100	+	+	+
Phtographic acid	-	+	+	+
Examined substances				

Substances	Concentration %	Temperature (°C) 20	60	100
Potassium crbonate	Sol.sat.	+	+	+
Potassium chlorate	Sol.sat.(7.3)	+	+	+
Potassium chlorite	sol.sat.	+	+	+
Potassium chromate	Sol.sat.	+	+	+
Potassium iodide	Sol.sat.(12)	+	+	+
Potassium nitrate	sol-sat.	+	+	+
Pot assium pemiangan	sol-sat.	+	+	+
potassium pemlfate	sol-sat.	+	+	+
Potassium sulfate	Sol.sat.	+	+	+
Propane gas	100	+	+	+
Propane liquid	100	+	+	+
Pyridiae	100	+	+	+
Quinine	-	+	+	+
Salt dry	-	+	+	+
SUve salt	sol-sat.	+	+	+
Soap lipuid	10	+	+	+
Soda caustic	100	+	+	+
Sodium bicarbonat e	sol-sat.	+	+	+
Sodiun carbnate	sol-sat.	+	+	+
Sodiun chlorate	25	+	+	+
Sodium hypochlorite	sol-sat.	+	+	+
Sodium nitrate	5	+	+	+
Sodium phosphate	sol-sat.	+	+	+
Sodium sulphate	sol-sat.	+	+	+
Sodium sulphite	sol-sat.	+	+	+
Sodium thiosulphate	sol-sat.	+	+	+
Starch	sol-sat.	+	+	+
Suiphure carbon	T	+	+	+
Tea	-			
Tertra chlorine ehtylen	-	+	+	+
Tetraidrophurano	100	+	+	+
Thiophene	100	+	+	+
Tin 11 chloride	100	+	+	+
Toothpaste	sol-sat.	+	+	+
Trichlorethylene	-	+	+	+
Tricresyphosphate	100	+	+	+
Turpentine	-	+	+	+
Urea	100	+	+	+
Vanilla	-	+	+	+
Vaseline	-	+	+	+
Vineger	-	+	+	+

SEMBOL *SYMBOL*	AÇIKLAMA *COMMENT*	SEMBOL *SYMBOL*	AÇIKLAMA *COMMENT*
+	**Yüksek Dayanıklı** / *Highly Resistant*	-	**Dayanıklı Değil** / *Nonresistant*
⊕	**Dayanıklı** / *Resistant*	**Sol.sat**	**Doymuş Çözelti** / *Saturated Solution*
O	**Oldukça Dayanıklı** / *Fairly Resistant*	**t**	**bütün%** / *all%*
⊖	**Az Dayanıklı** / *Scarcely Resistant*	**s**	**Renk Kaybı** / *It Loses Colour*

ÇELİK TELLİ DÜZ KÖRÜKLÜ KADA - 500 MM

89-107 mm klozet giriş x 90 mm / 100 mm / 110 mm - 500 mm
Arkadan çıkışlı tüm klozetlerin pis su tesisatına kolaylıkla monte edilmesine olanak sağlar.
Tüm klozet modellerine uygundur.

Malzeme
Polipropilen+TPE+Polietilen+Çelik tel

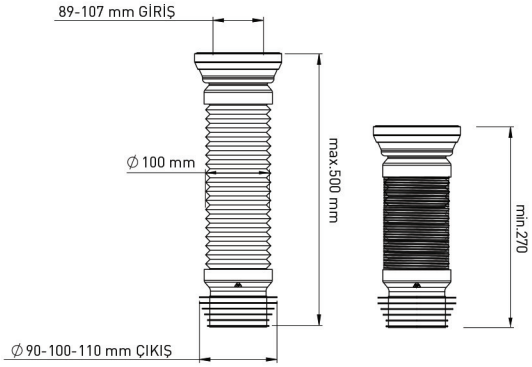

Malzeme
Polipropilen+TPE+Polietilen+Çelik tel

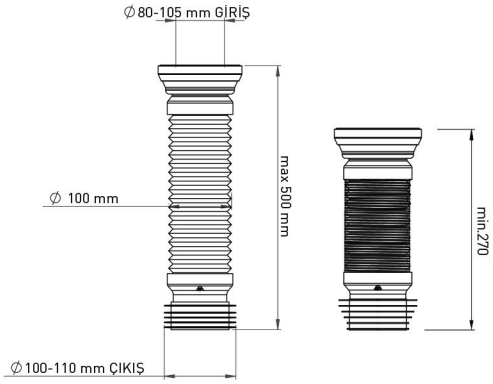

EKSANTRİK KADA

89-107 mm klozet giriş x100 mm çıkış 20 mm Eksen kaçıklığı vardır.
Klozet pis su çıkışlarını tesisata bağlamak için kullanılır.
Tesisattan koku girişini önler.

Malzeme
EVA Yumuşak, dayanıklı, esnek plastik malzeme

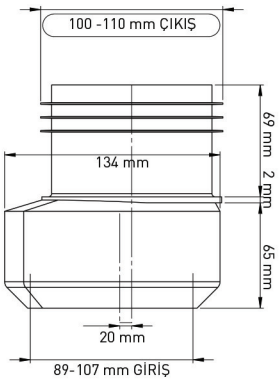

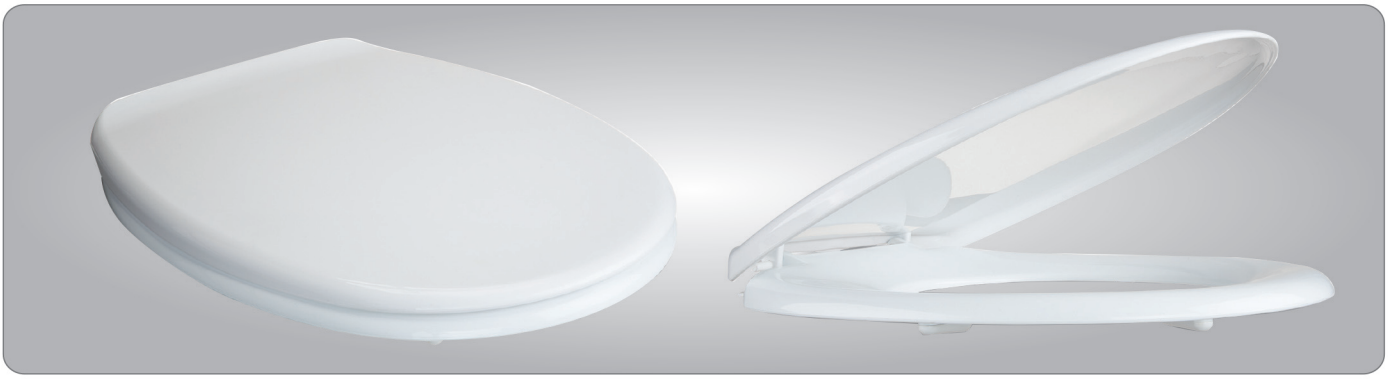

Akdeniz Klozet Kapağı

Malzeme
PP

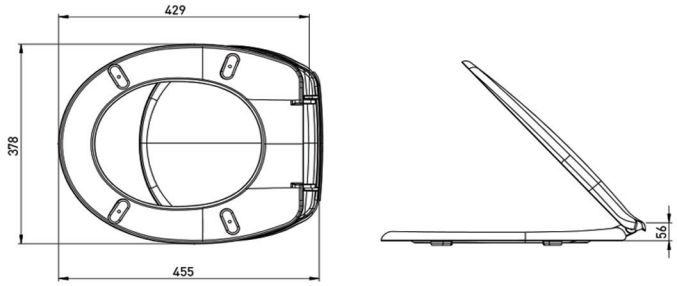

Aqua Soft Klozet Kapağı

Malzeme
PP

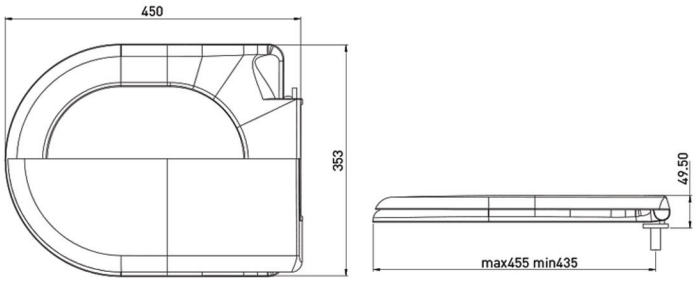

Pis su tesisatlarında Ø 50 girişli Ø 40-50 mm conta çıkışlı pis su borusunun ve ek parçaların fiziki olarak dönemediği yerlerde esnek yapısıyla bağlantı yapmayı sağlar. Genelde küvet ve yer süzgecini pissu gider tesisatına bağlamada kullanılır.

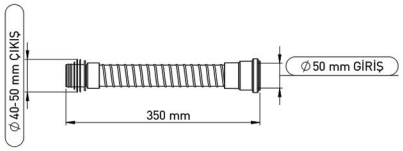

Malzeme
Polipropilen+TPE

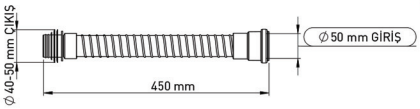

Malzeme
Polipropilen+TPE

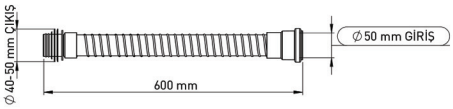

Malzeme

Ø90*220 MM Gömme rezervuar için pis su çıkış borusu.
89-107 mm klozet giriş, tüm klozet modellerine uygundur.

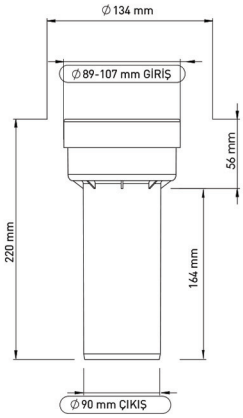

Malzeme
Polipropilen+TPE

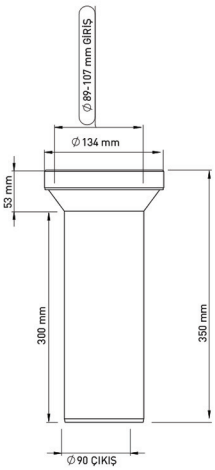

Malzeme
Polipropilen + TPE

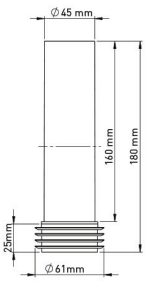

Malzeme
Polipropilen + TPE

U-PVC 48 MM X 25 MM (1'') SİFON ADAPTÖR CONTASI

Pis su gider contası.

Malzeme
TPE

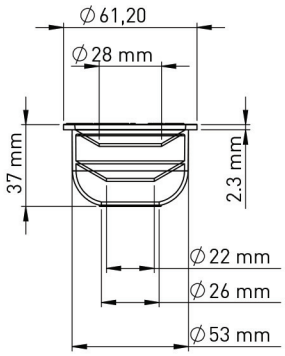

TAHARET BORUSU PLASTİK UÇLU

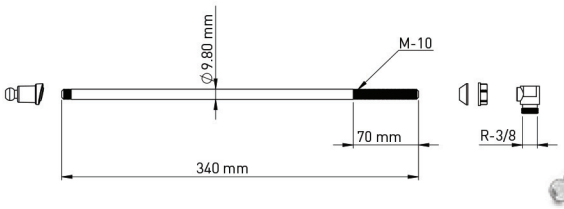

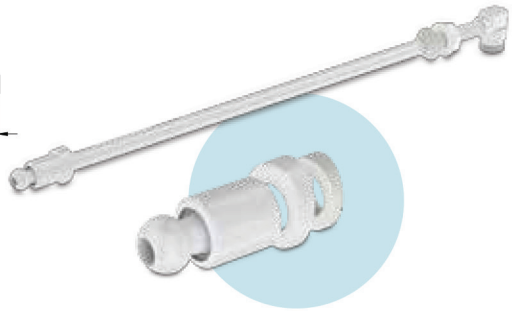

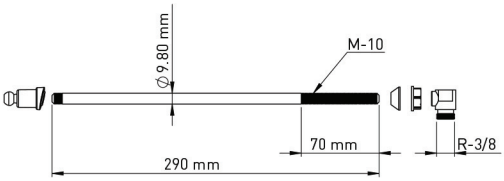

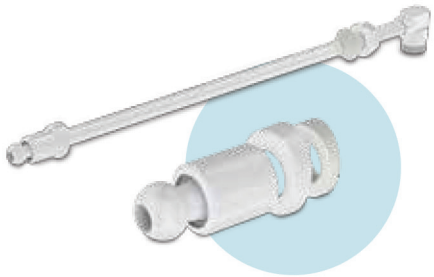

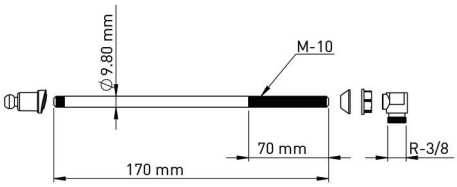

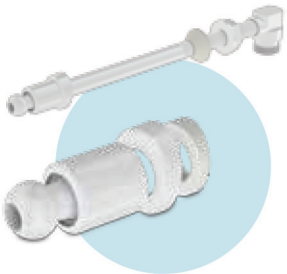

Tek Basmalı İç Takım

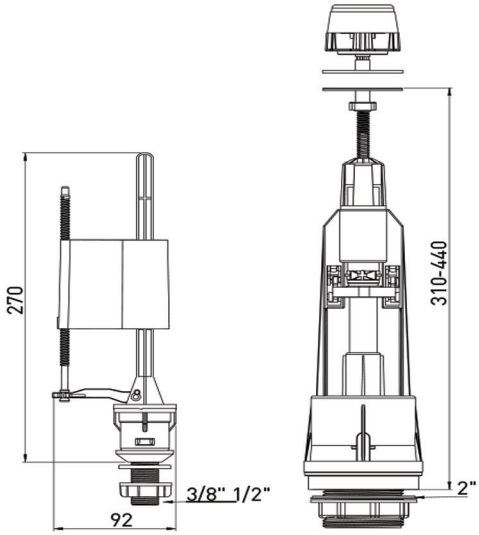

komplus

T.C.
TÜRK PATENT ENSTİTÜSÜ

MARKA TESCİL BELGESİ

Marka No : 2011 10798 - Ticaret

komplus

Marka Sahibi : HARUN TURĞUT
TÜRKİYE CUMHURİYETİ

Emtiası : 06, 11, 20
İlişiktedir.

T.C.
SANAYİ VE TİCARET BAKANLIĞI
Sanayi Genel Müdürlüğü

SANAYİ SİCİL BELGESİ

Belge Tarihi 24-05-2011	Belge No 541353.00	Veriliş Sebebi DEĞİŞİKLİK	Vergi No:
İşletme Ünvanı	TURGUTLAR YAPI MALZEMELERİ İMALAT VE PAZARLAMA - HARUN TURĞUT		
İşyeri Adresi 1 2 3 4 5	Rami Yeni Mh. Havuzbaşı Çeşme Sk. No: 11/1 Eyüp - İSTANBUL		
Kayıtlı Bulunduğu Meslek Odası	İSTANBUL TİCARET ODASI	Kuruluş Tarihi ve Ticaret Sicil No	29.11.2011 80897-5
Kapasite Raporunun Birlik Onay Tarih ve No	17.03.2017 3264	Ticaret Sicil Gazetesinin Tarih ve Sayısı	6.10.2017 80897-5
ÜRETİM KONUSU BAĞLANTI PARÇALARI (FITTINGS)			

..... YILI VİZESİ | ..... YILI VİZESİ | ..... YILI VİZESİ | ..... YILI VİZESİ | ..... YILI VİZESİ

T.C.
TÜRK PATENT ENSTİTÜSÜ

MARKA TESCİL BELGESİ

Marka No : 2011 10798 - Ticaret

msplast

Marka Sahibi : HARUN TURĞUT
TÜRKİYE CUMHURİYETİ

Emtiası : 06, 11, 20
İlişiktedir.

İSTANBUL TİCARET ODASI

TÜRKİYE ODALAR VE BORSALAR BİRLİĞİ

KAPASİTE RAPORU

İSTANBUL TİCARET ODASI

Geçerlilik Süresi Sonu 09.10.2019

Rapor Tarihi :09.10.2017
Rapor No :3493

Firma Ünvanı	:HARUN TURĞUT TURGUTLAR YAPI	Sanayi Sicil No	:
Tescilli Markaları	:	Oda Sicil No	:808975
Vergi Dairesi/No	:Bayrampaşa V.D. / 17578960766	Ticaret Sicil No	:80897-5
İşyeri SGK No	:22223060611915230342 5-37	Faaliyet Kodu (NACE)	:22.23.07
MERSİS No	:1757-8960-7660-0001		

Üretimin Yapıldığı Yer — Adres : RAMİ YENİ MAH.HAVUZBAŞI ÇEŞME SOK.NO:11/1 EYÜP / İSTANBUL
İşyeri Tel (Kodlu): 212-2567812 Faks : 212-2567702
e-posta : info@tmsplast.com.tr Web :

Merkez — Adres RAMİ YENİ MAH.HAVUZBAŞI ÇEŞME SOK.NO:11/1 EYÜP / İSTANBUL
Büro Tel (Kodlu): 212-2567812 Faks : 212-2567702

Üretim Konuları :Plastik Enjeksiyon Ürünleri

Üretim Tesisinin Durumu		Sermaye Kıymetler Durumu (TL)		Personel Durumu	
Kırıcı		Makine ve Teçhizat Değeri	85.000	Mühendis :	-
Arazi (m2)	-	Tescilli Sermayesi	100	Teknisyen :	-
Toplam Kapalı Saha (m2)	1.000			Usta :	-
Bina İnşaat Tipi	B.ARME			İşçi :	4
				İdari Pers. :	-
				Toplam :	4

Üretim Faaliyetine Başlama Tarihi : 21.04.2017

Yabancı Sermaye		Gayri Maddi Hak			
Ülkesi	Oranı (%)	Patent	Know How	Lisans	Ülkesi

Sertifikalar :

Yukarıda ünvanı yazılı işletmenin, işyerinde mevcut makine ve teçhizatının yürürlükteki yöntem ve kriterlere göre teorik olarak hesaplanan azami üretim kapasitesi ile tüketim kapasitesini kapsayan bu kapasite raporu 06.10.2017 günü tarafımızdan düzenlenmiştir.

RAPORTÖR	1.EKSPER	2.EKSPER
CEMİL ASLAN Kapasite Servisi Raportörü	A.NÜVİT SİPAHİER Kimya Yüksek Mühendisi	-

Aslı Gibidir
Nuray BOKZAN
22 Şubat 2019

T.C.
TÜRK PATENT ENSTİTÜSÜ

FAYDALI MODEL BELGESİ

No: TR 2012 00469 Y

Bu Belge 551 Sayılı Patent Haklarının Korunması Hakkında Kanun Hükmünde Kararname'nin 162 nci maddesi uyarınca 13.01.2012 tarihinden itibaren 10 yıl süre ile verilmiştir.

T.C.
TÜRK PATENT ENSTİTÜSÜ

FAYDALI MODEL BELGESİ

No: TR 2011 00569 Y

Bu Belge 551 Sayılı Patent Haklarının Korunması Hakkında Kanun Hükmünde Kararname'nin 162 nci maddesi uyarınca 20.01.2011 tarihinden itibaren 10 yıl süre ile verilmiştir.

T.C.
TÜRK PATENT ENSTİTÜSÜ

FAYDALI MODEL BELGESİ

No: TR 2006 03677 Y

Bu Belge 551 Sayılı Patent Haklarının Korunması Hakkında Kanun Hükmünde Kararname'nin 162 nci maddesi uyarınca 14.07.2006 tarihinden itibaren 10 yıl süre ile verilmiştir.

T.C.
TÜRK PATENT ENSTİTÜSÜ

FAYDALI MODEL BELGESİ

No: TR 2010 02216 Y

Bu Belge 551 Sayılı Patent Haklarının Korunması Hakkında Kanun Hükmünde Kararname'nin 162 nci maddesi uyarınca 23.03.2010 tarihinden itibaren 10 yıl süre ile verilmiştir.

Salih BEKTAŞ
Enstitü Başkanı a.
Patent Dairesi Başkanı

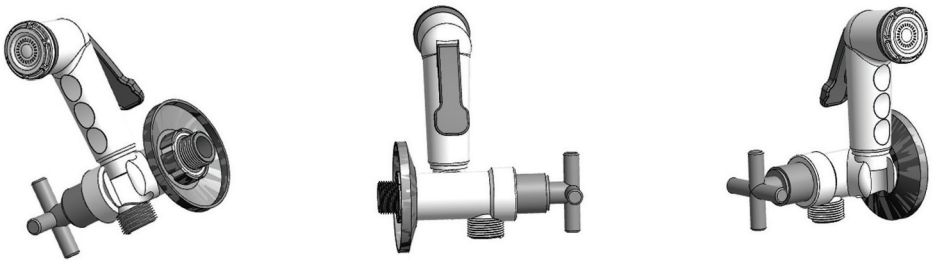

komplus

Turkey

komplus

www.komplus.com.tr • info@komplus.com.tr